RevNo	Revision note	Date	Signature	Checked

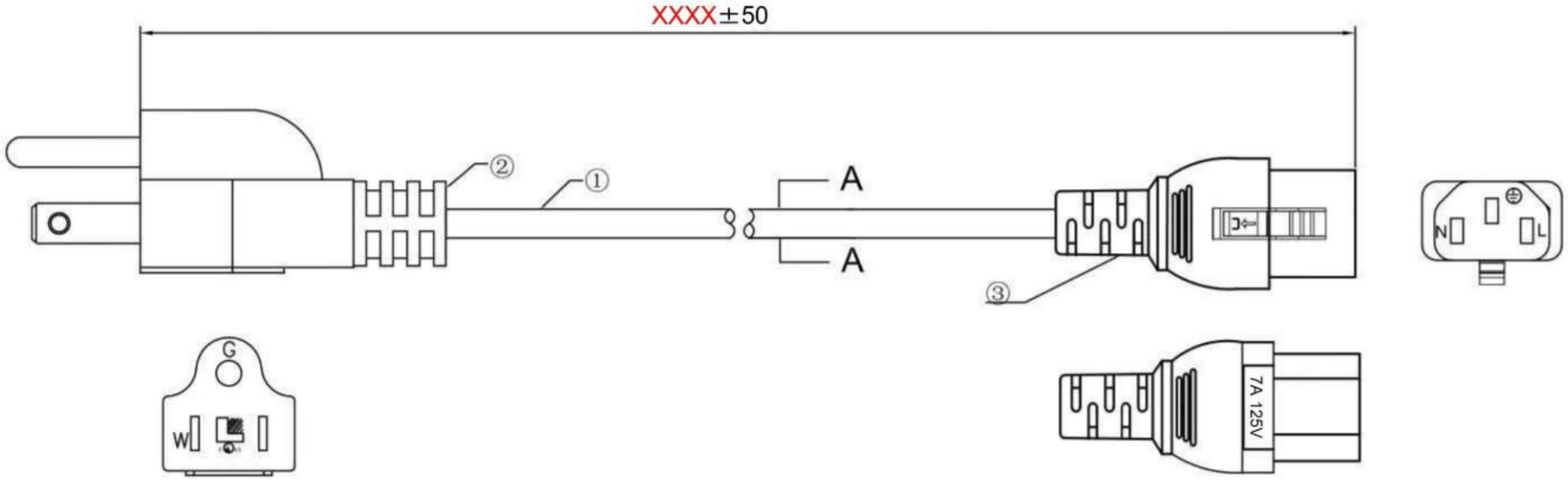

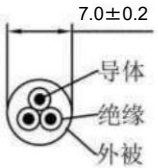

A=A截面图

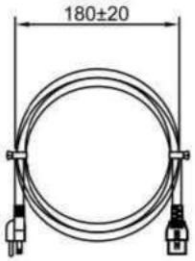

绕线图

Itemref	Quantity	Title/Name,designation,material,dimension etc	Article No.:
3	1	Lock IEC 60320 C13	Black
2	1	3P-Plug	Black
1	1	Cable VCTF 0.75sq × 3C	Black

Designed by DESIGNED_BY	Checked by CHECKED_BY	Approved by-date APPROVED_BY_DATE	Date DATE	File name FILENAME	Scale SCALE

NCNX-PWL3PC1307AxxxxBK

Edition EDITION	Sheet SHEET